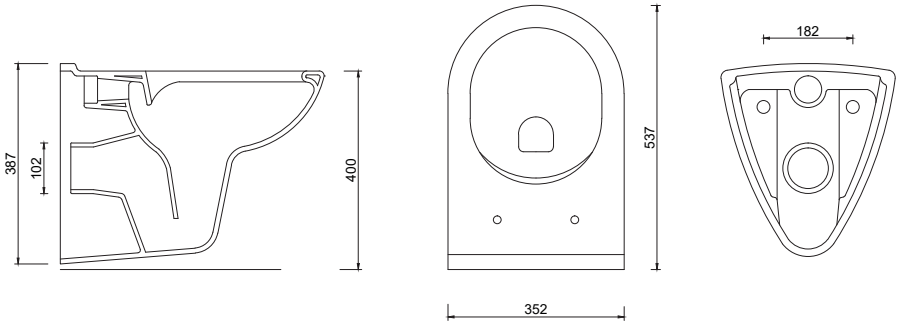

K029DAK00
COMPACT RIMLESS DUVARA ASMA KLOZET

K031DAK00
COMPACT RIMLESS WALL HUNG CLOSET